未注公差/General tolerances(mm)														
0 ~ 3	>3 ~ 6	>6 ~ 10	>10 ~ 18	>18 ~ 30	>30 ~ 50	>50 ~ 80	>80 ~ 120	>120 ~ 180	>180 ~ 250	>250 ~ 315	>315 ~ 400	>400 ~ 500	>500	0.1/10
±0.12	±0.18	±0.22	±0.26	±0.31	±0.37	±0.57	±0.80	±0.93	±1.05	±1.15	±1.60	±2.20	±2.50	±2°

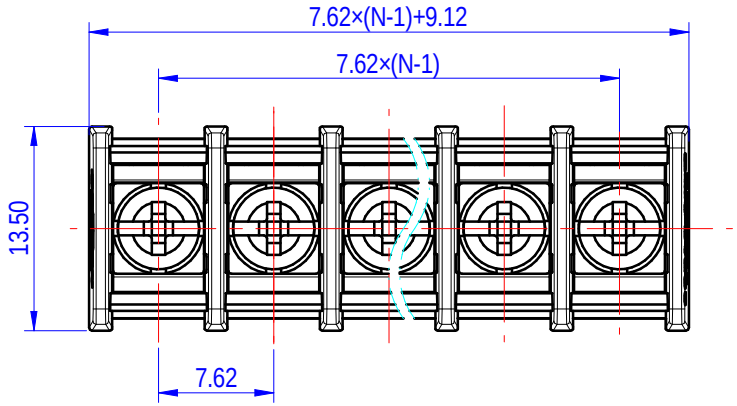

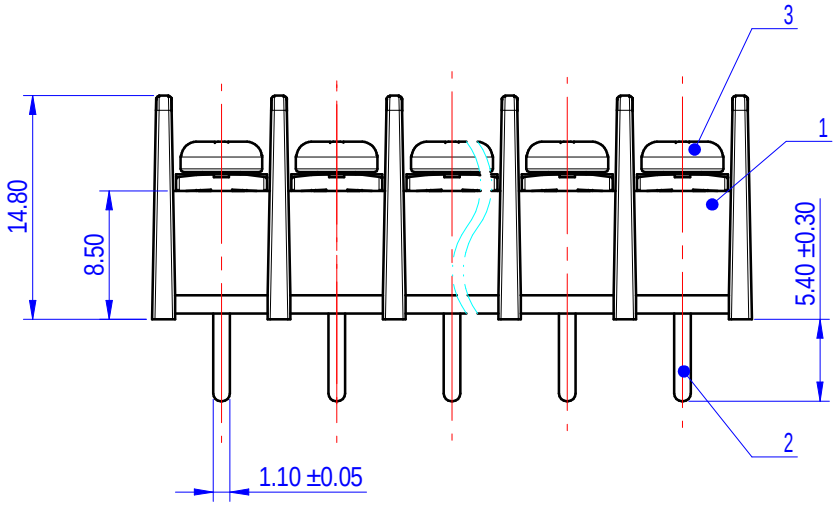

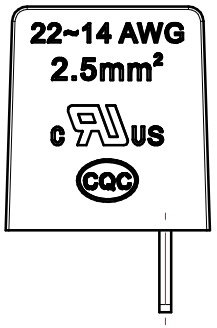

Note:The A&Z(H) in the name means:A(H) and Z(H).

ITEM	NAME OF PART	MATERIAL	NOTES
3	Screw	Steel	Zn Plated
2	Pin header	Copper alloy	Sn Plated
1	Housing	PA66	UL94V-0

UL 标准/UL Standard:	B	C	D
额定电压/电流/Rated Voltage(V)/Current(A)	300/15	/	/
螺丝扭矩/Torque Tightening(N · m/Lb.in)	M3, 0.5/4.43		
线径范围(硬线和软线)/Wire Range(rigid and flexible)(AWG/mm²)	22~14		
间距/Pitch(mm)/线数范围/Poles	7.62/N=02~24P		
使用温度范围/Operating temperature(°C)	-40~+105		
符合 RoHS 环保要求/Conform to RoHS	Yes		

DEGSON

APPD:	核准人	核准日期
CHKD:	审核人	审核日期
DRFT:	设计人	设计日期

A4 mm (inch)

MATERIAL: 材质 | SURFACE/COLOR: 表面处理

MAT NO./REV: 物料编码 / 版本 | MAT STATUS: 物料状态

NAME: DG25S-B-XXP-1Y-00A&Z(H)

DRAWING NO.	TYPE	DRAWING STATUS	SCALE	SHEET
图号	图纸类型	图纸状态	2:1	1/1

图纸版本	ECN	变更描述	设计人	设计日期
REV	ECN	DESCRIPTION	DRFT	DATE

Transfer or duplication of this document as well as the utilization or communication of its contents are prohibited unless explicit authorization is granted. Violations will be liable for compensation. All rights reserved for patent, utility model or designs registrations. 除非经予明确授权，否则禁止转让、复制、利用、交流本文件的内容。侵犯专利性实用新型或外观专利的所有权利。