未注公差/General tolerances(mm)														
0 ~ 3	>3 ~ 6	>6 ~ 10	>10 ~ 18	>18 ~ 30	>30 ~ 50	>50 ~ 80	>80 ~ 120	>120 ~ 180	>180 ~ 250	>250 ~ 315	>315 ~ 400	>400 ~ 500	>500	0.1/10
±0.12	±0.18	±0.22	±0.26	±0.31	±0.37	±0.57	±0.80	±0.93	±1.05	±1.15	±1.60	±2.20	±2.50	±2°

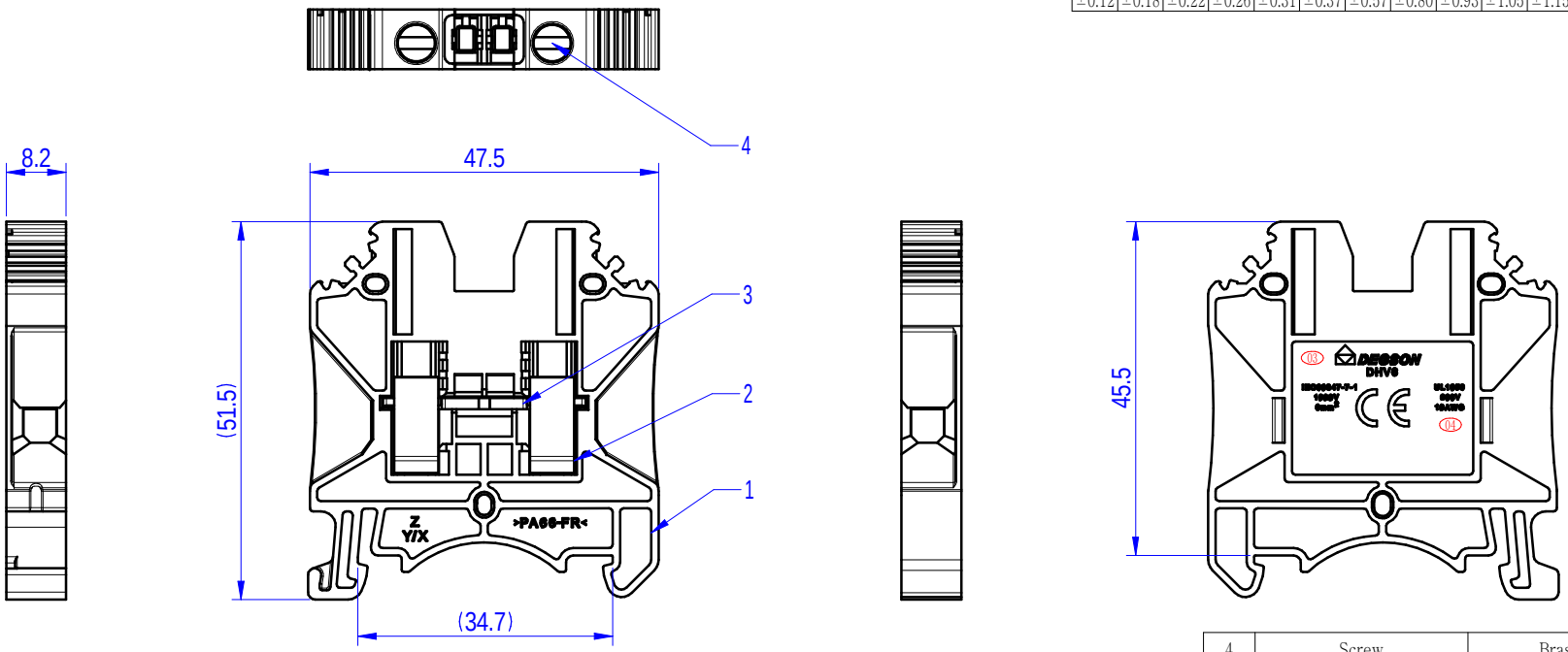

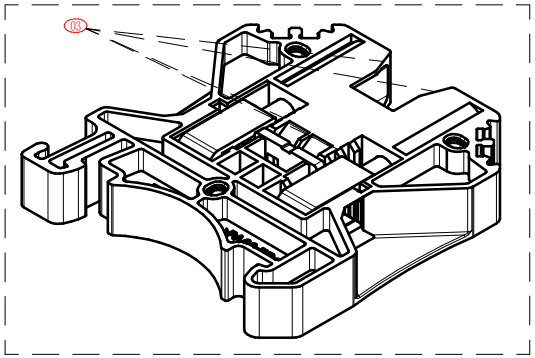

ITEM	NAME OF PART	MATERIAL	NOTES
4	Screw	Brass	M4 Ni Plated
3	Current Carrier	Copper Alloy	Sn Plated
2	Cage	Brass	Ni Plated
1	Housing	PA66	UL94 V-0

UL 标准/UL Standard:	B	C	D
额定电压/电流/Rated Voltage(V)/Current(A)	600/50	600/50	/
IEC 标准/IEC Standard:			
过压类别/Overvoltage Category/污染等级/Pollution Degree	III/3	III/2	II/2
额定电压/电流/Rated Voltage(V)/Current(A)	1000/41	/	/
额定脉冲电压(KV)/Rate Impulse Voltage(KV)	8	/	/
螺丝扭矩/Torque Tightening(N·m/Lb.in)	M4, 1.5~1.8/13.28~15.94		
线径范围(硬线和软线)/Wire Range(rigid and flexible)(AWG/mm²)	24~10/0.2~6.0 最大裸线：8AWG/10mm²		
间距/Pitch(mm)/线数范围/Poles	8.2/N=01P		
剥线长度/Stripping length(mm)	10~11		
03 环境温度(运行)/Ambient temperature (operation)(°C)	-60~+105(最高短期工作温度，电气特性相对温度。)		
符合RoHS环保要求/Conform to RoHS	Yes		

REV	ECN	DESCRIPTION	DRFT	DATE
04		Design change housing part	Chen KZ	2023.12.19

DEGSON

APPD:	Peng M	2023.12.19
CHKD:	Lu JK	2023.12.19
DRFT:	Chen KZ	2023.12.19

A4 mm (inch)

MATERIAL:
SURFACE/COLOR: 灰色塑件
MAT NO./REV: 11010001084-1 / 00.02
MAT STATUS: 批量

NAME: DHV6-01P-11-00A&Z(H)

DRAWING NO.	TYPE	DRAWING STATUS	SCALE	SHEET
200105023	CUSTOMER DRAWING	已发布	1:1	1/1

Transfer or duplication of this document as well as the utilization or communication of its contents are prohibited unless explicit authorization is granted. Violations will be liable for compensation. All rights reserved for patent, utility model or designs registrations. 除非经予明确授权，否则禁止转让、复制、利用、交流本文件的内容，侵犯专利权或实用新型或外观设计专利的所有权利。